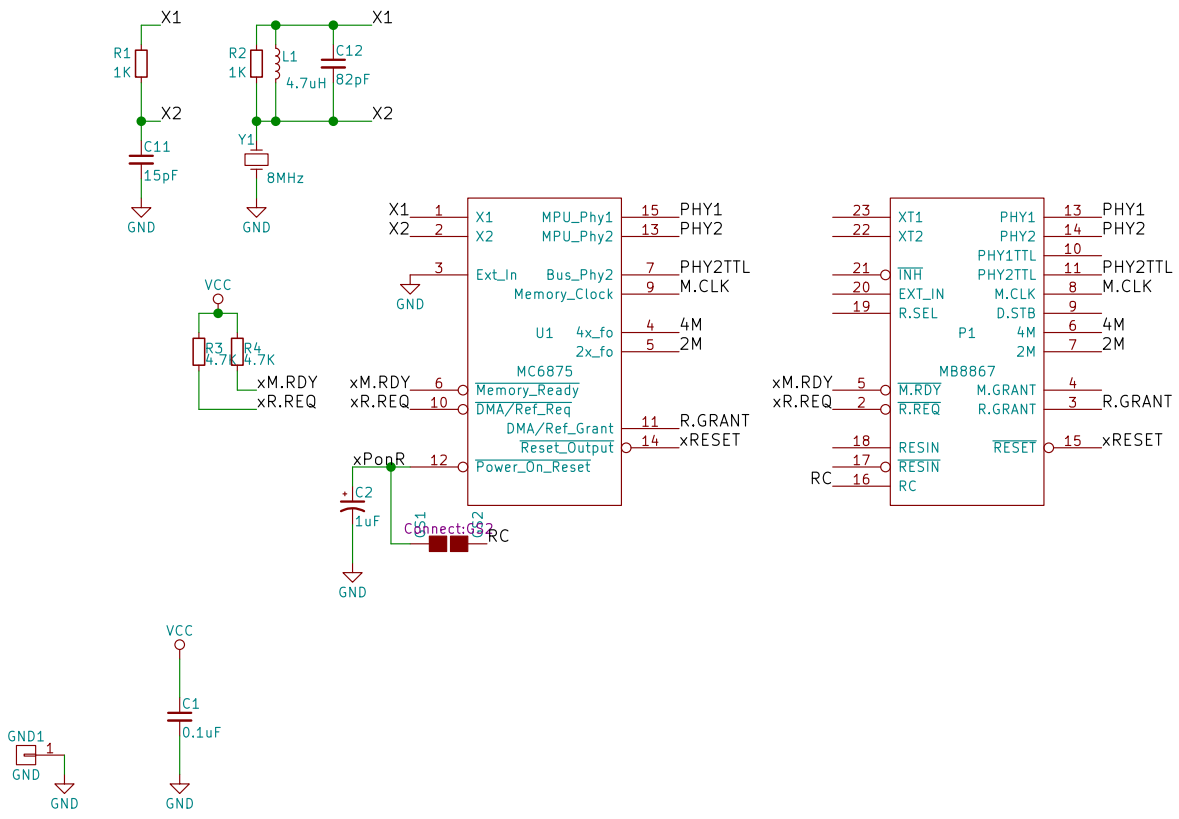

Sheet: /
File: MC6875_MB8867.sch

Title:

Size: A4	Date:	Rev:
KiCad E.D.A. kicad 4.0.4-stable		Id: 1/1